RIVA Collection
G-18013VAD-T
RIVA Traditional 3-button split knob diamond knurl vertical trim

Available Finishes

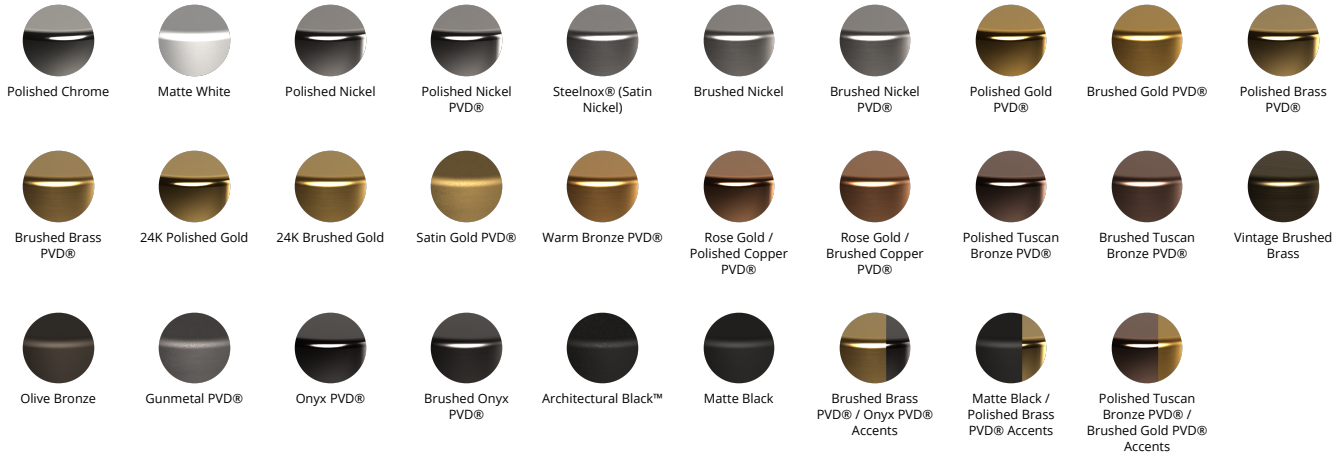
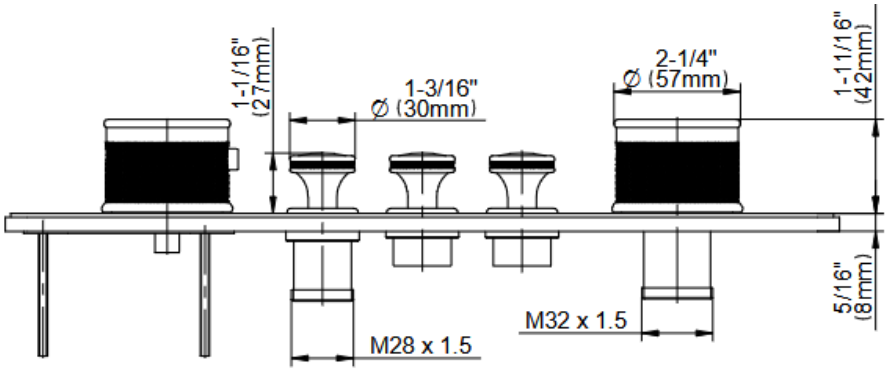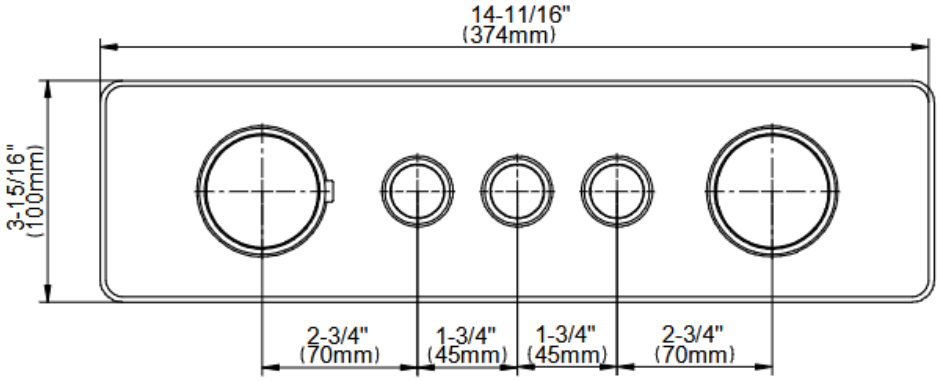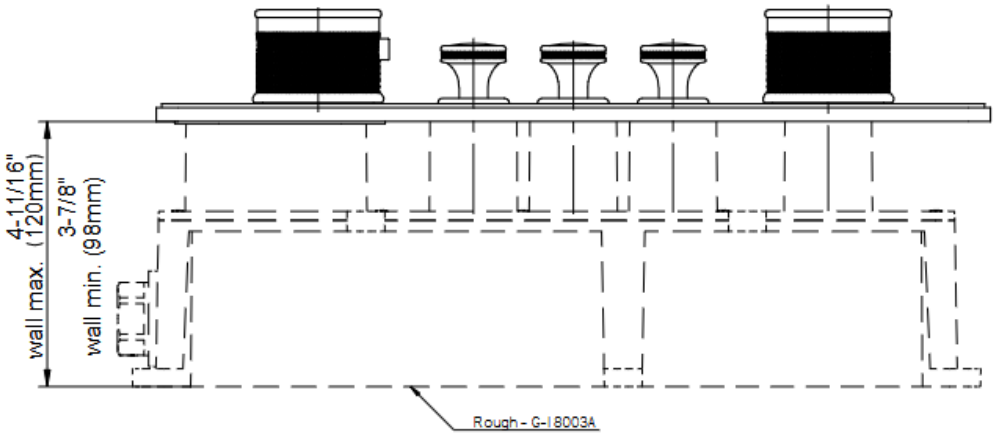
RIVA Collection
G-18013VAD-T
RIVA Traditional 3-button split knob diamond knurl vertical trim