RIVA Collection
G-18013HAP-T
RIVA Traditional 3-button split knob horizontal trim

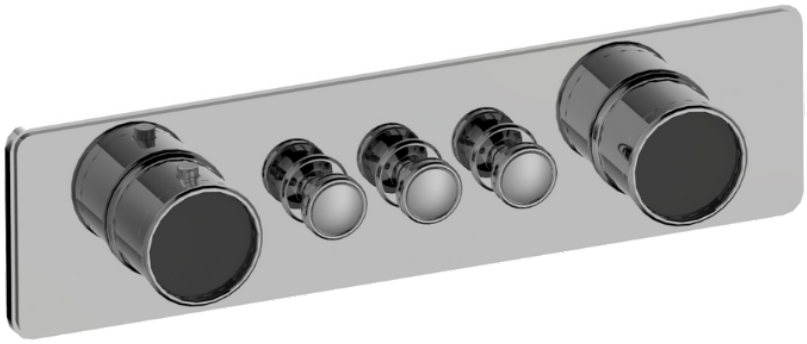

Available Finishes

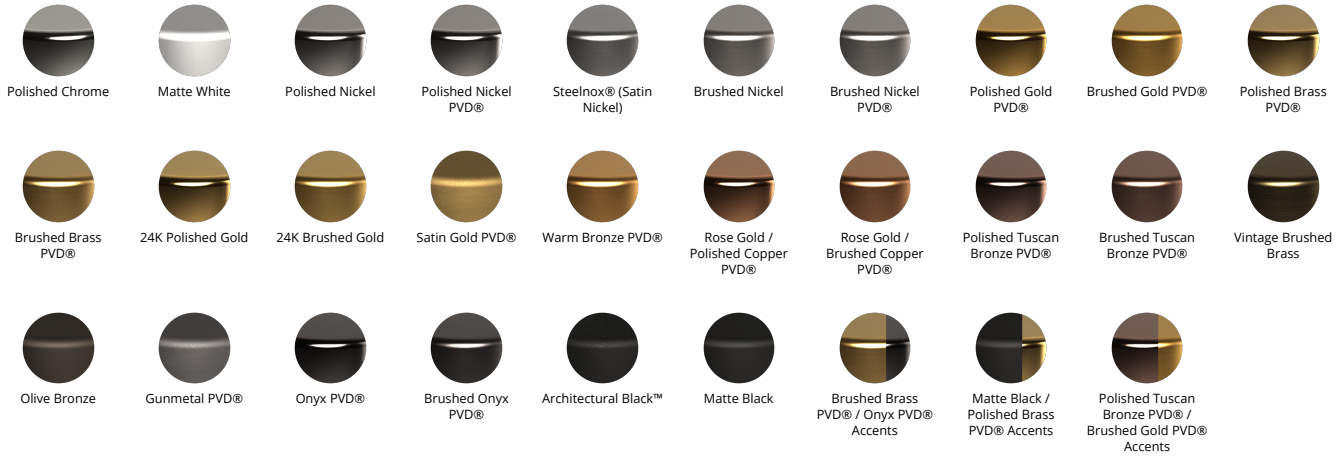
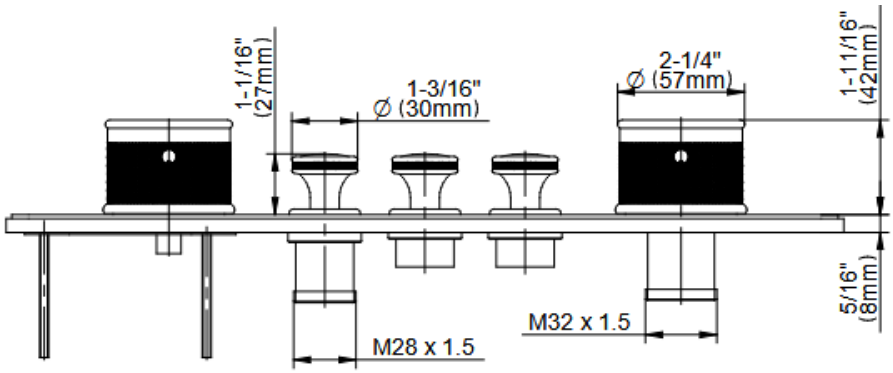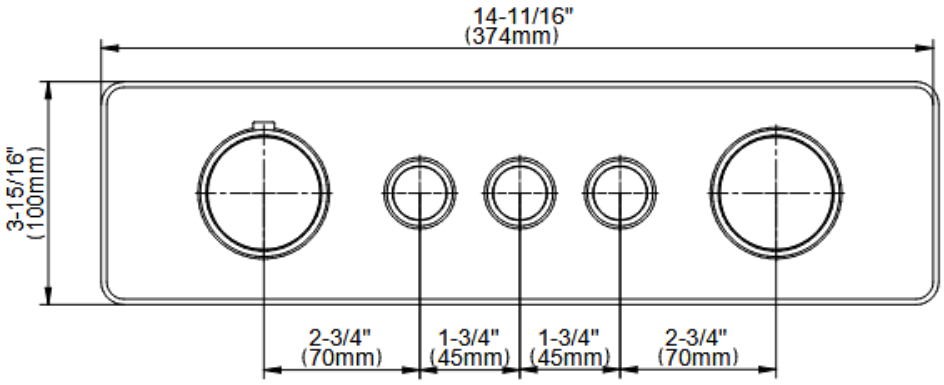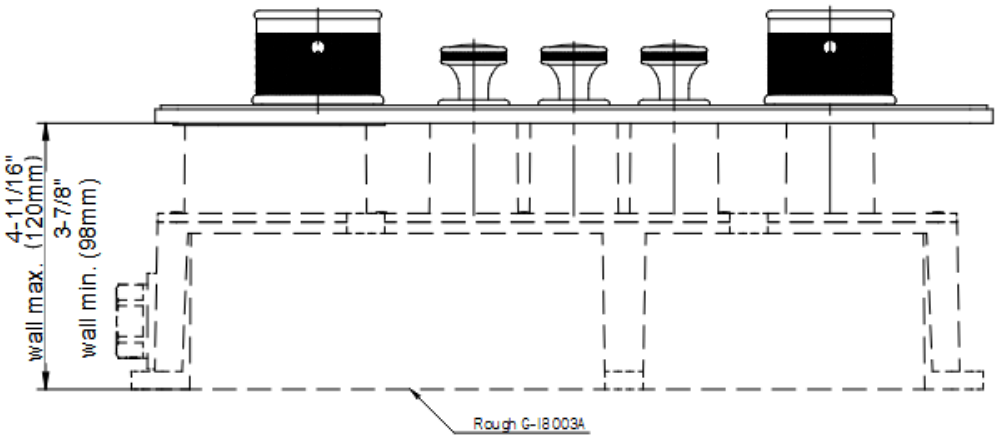
RIVA Collection
G-18013HAP-T
RIVA Traditional 3-button split knob horizontal trim