RIVA Collection
G-18012VAD-T
RIVA Traditional 2-button split knob diamond knurl vertical trim

Available Finishes

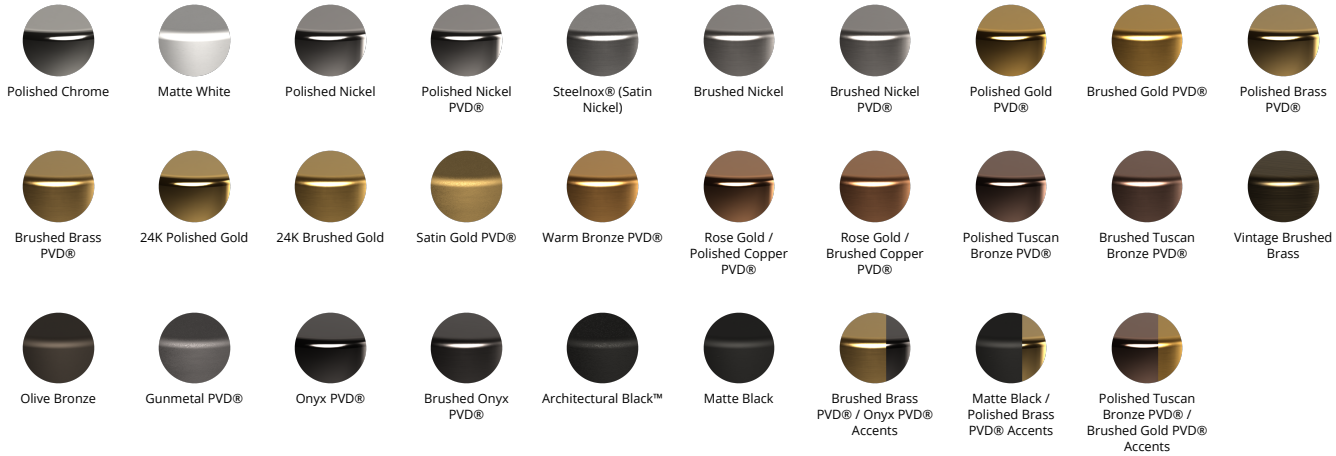
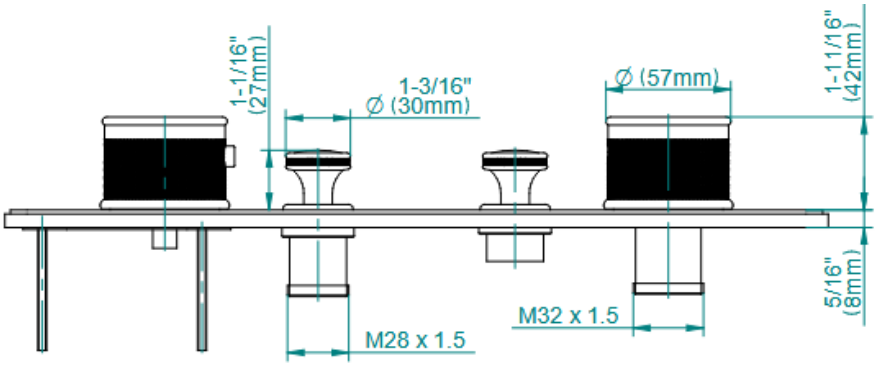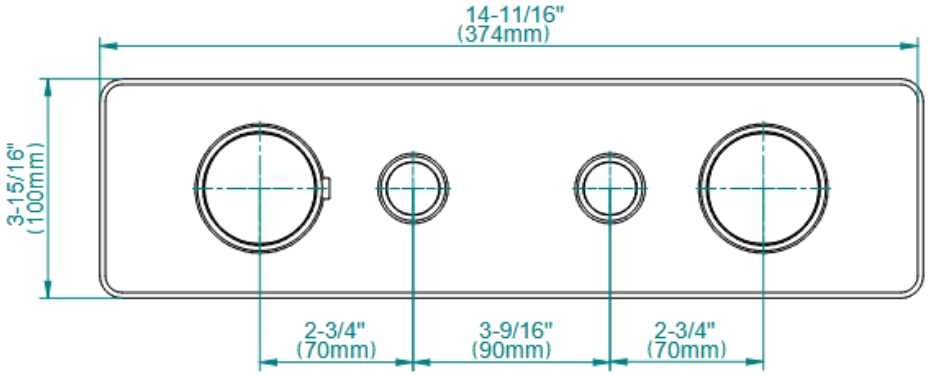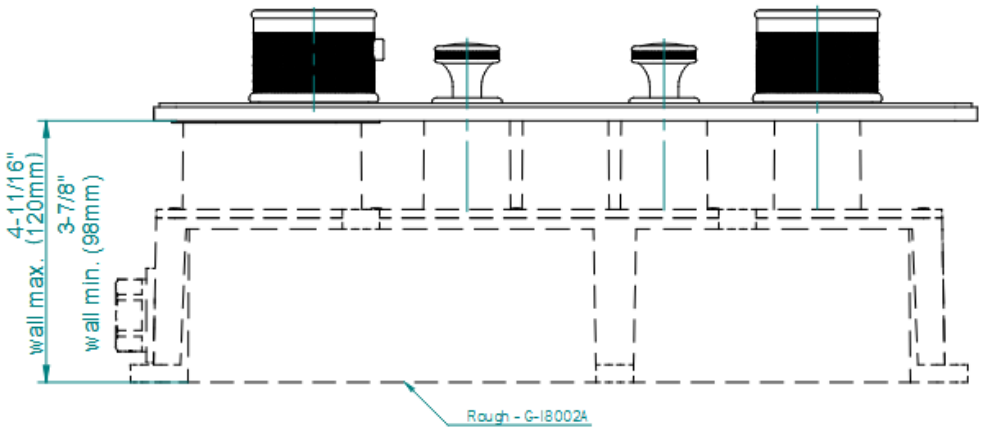
RIVA Collection
G-18012VAD-T
RIVA Traditional 2-button split knob diamond knurl vertical trim