RIVA Collection
G-18012HAP-T
RIVA Traditional 2-button split knob horizontal trim

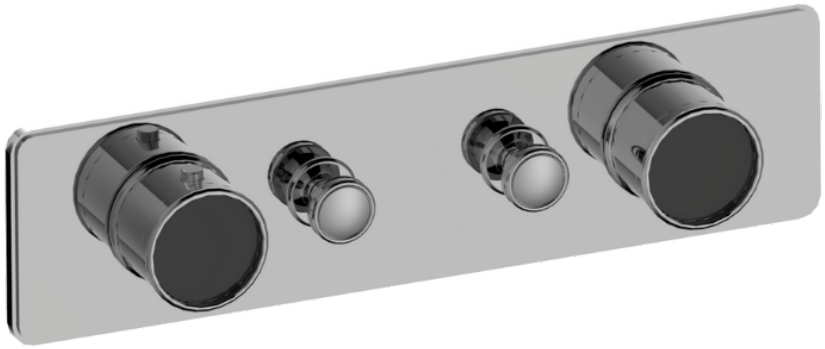

Available Finishes

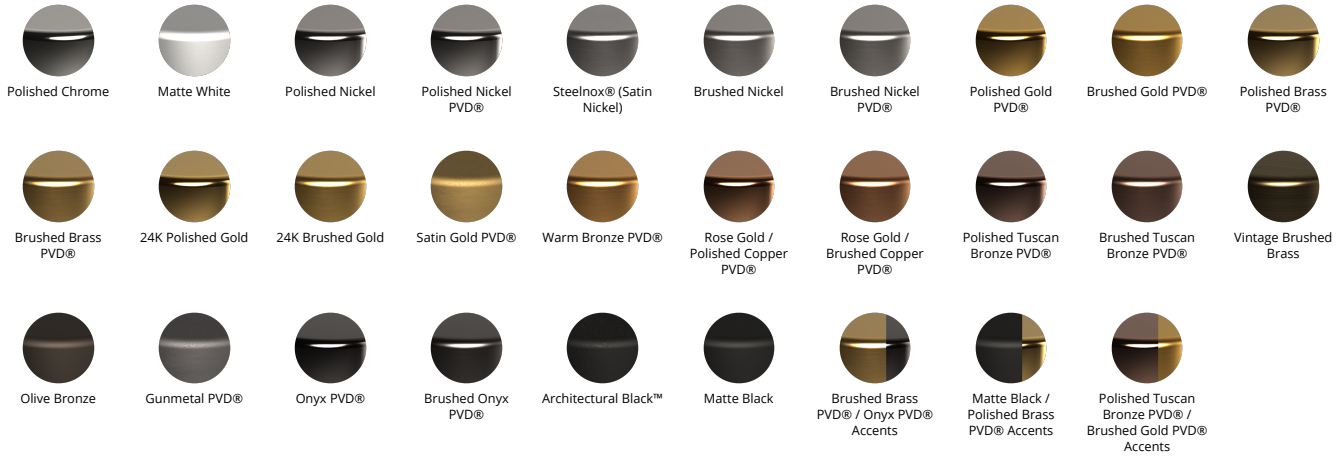
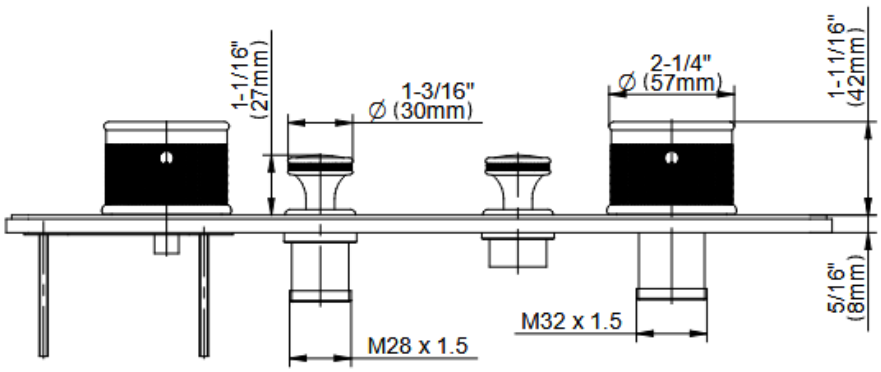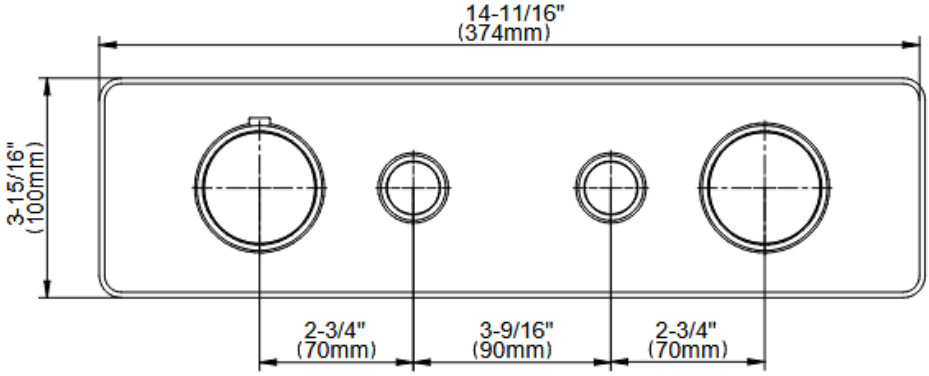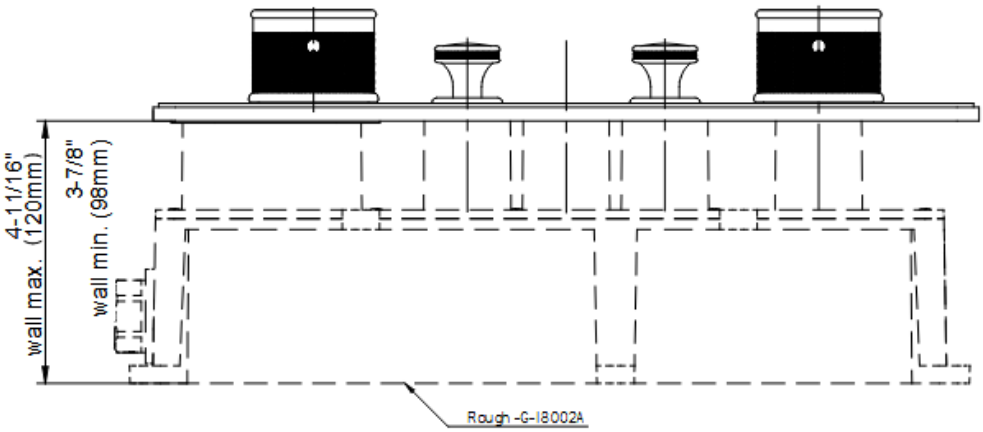
RIVA Collection
G-18012HAP-T
RIVA Traditional 2-button split knob horizontal trim