RIVA Collection
G-18012HAD-T
RIVA Traditional 2-button split knob diamond knurl horizontal trim

Available Finishes

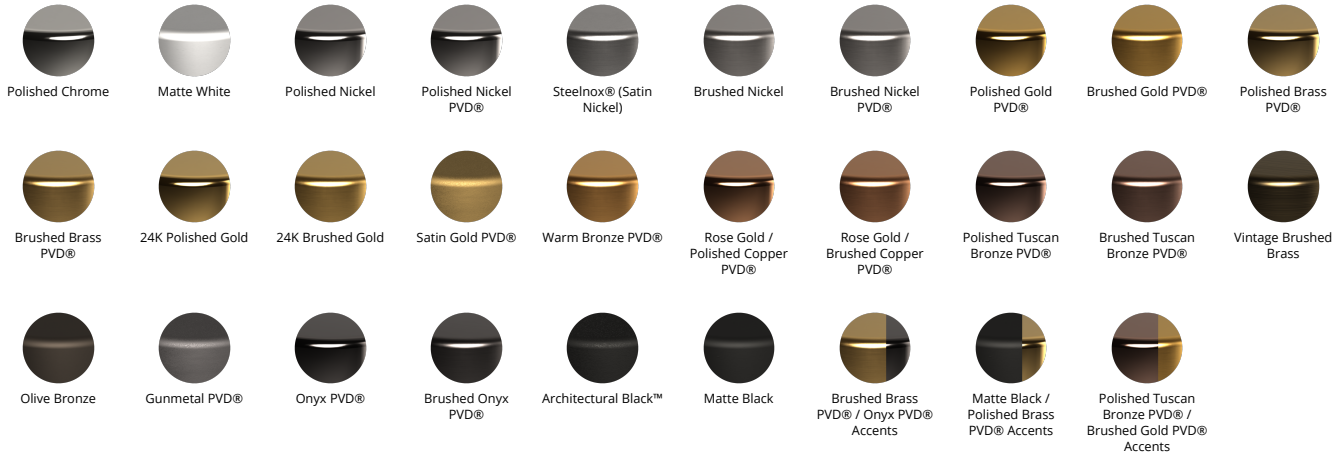
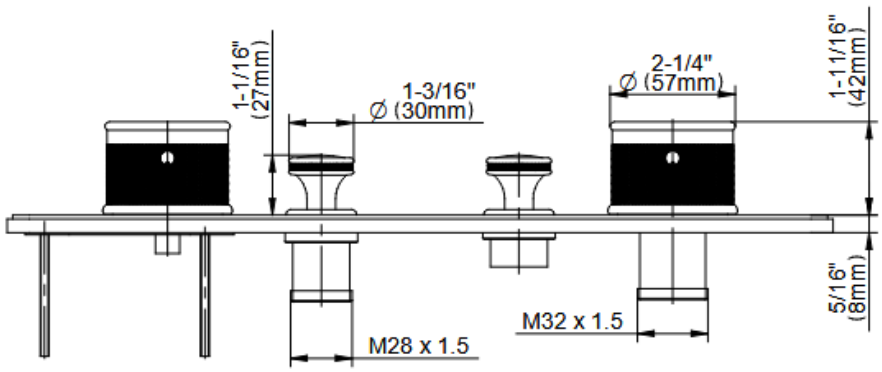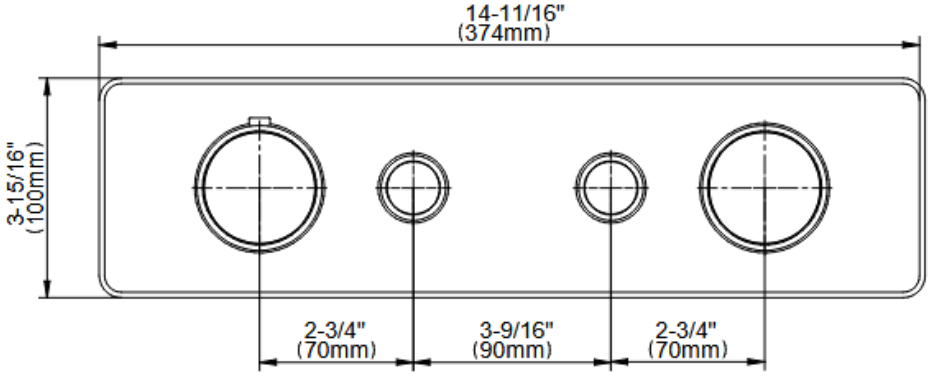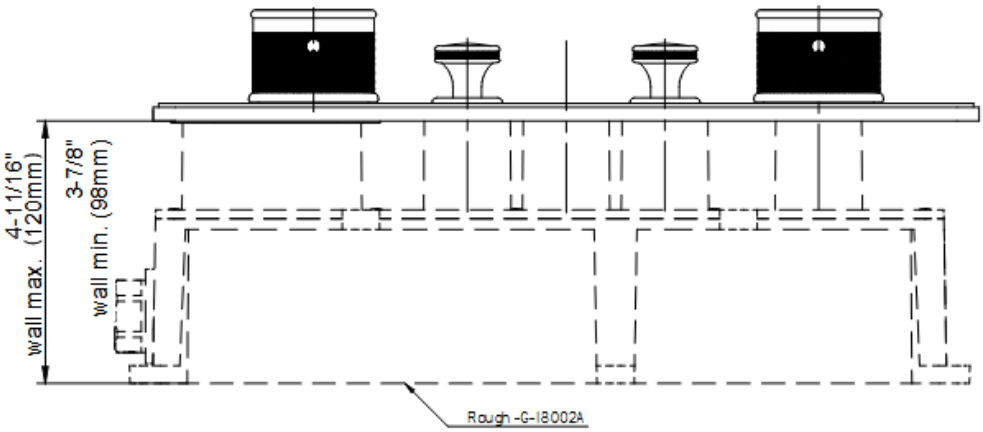
RIVA Collection
G-18012HAD-T
RIVA Traditional 2-button split knob diamond knurl horizontal trim