AXOR

AXOR Universal Rectangular
Towel hook
Surfaces: **Chrome** Article Number: **42611000**

product features

- wall-mounted
- material: metal
- with mounting material
- concealed fastening
- drilling distance: 35 mm
- diameter drill hole: 6 mm

Product image

Scale drawing

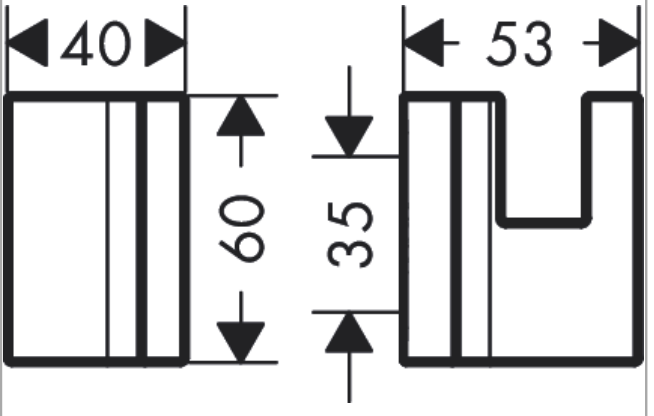

AXOR

AXOR Universal Rectangular
Towel hook
Surfaces: **Chrome** Article Number: **42611000**

Exploded Drawing

Year of production: **>10/22**

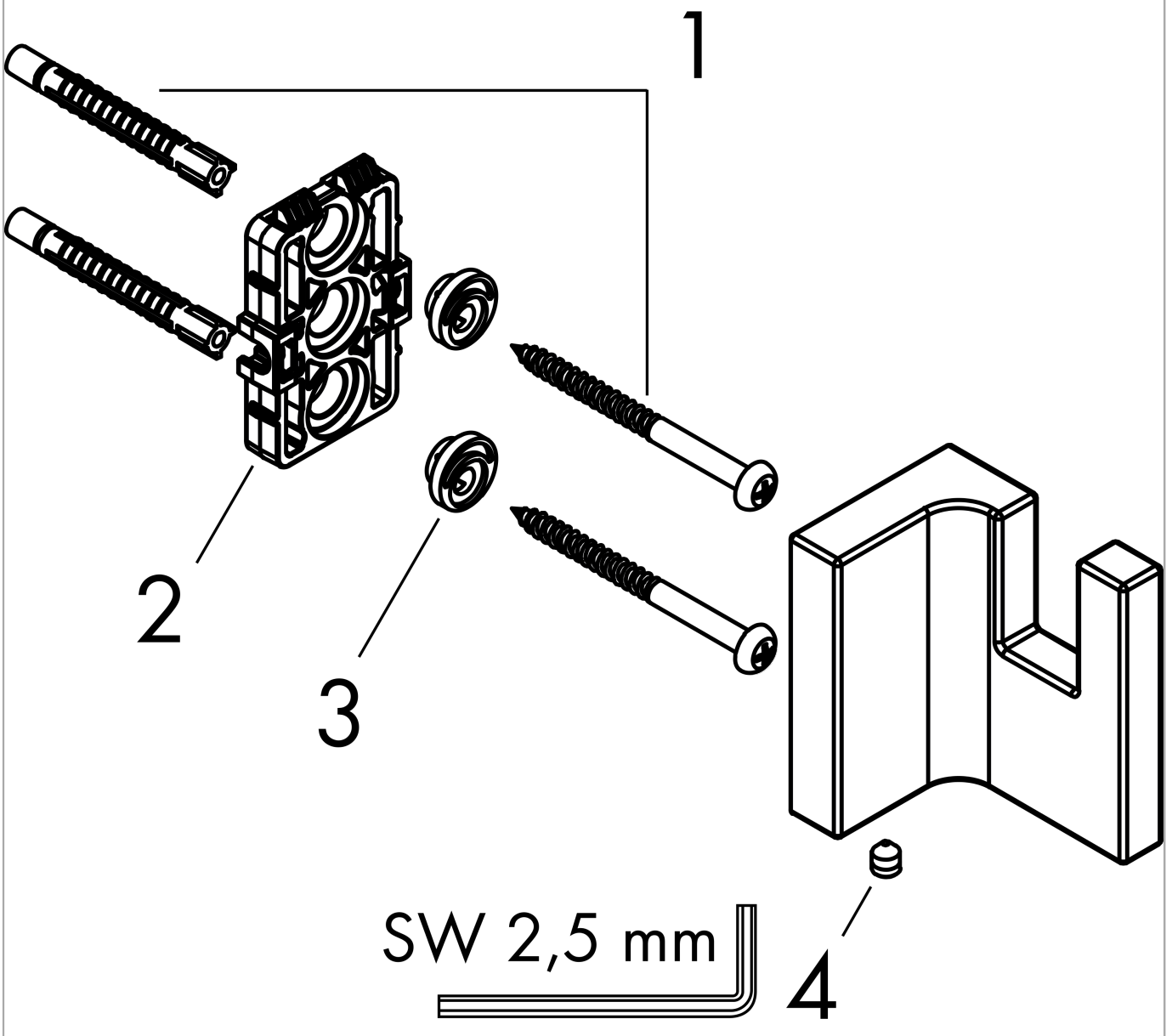

AXOR

AXOR Universal Rectangular
Towel hook
Surfaces: **Chrome** Article Number: **42611000**

Spare part list

Year of production: **>10/22**

Pos.		Article Number	Price	PU
1	mounting set	96179000	€ 11,31	1
2	support cpl.	94682000	€ 28,20	1
3	excentric socket	97604000	€ 8,45	1
4	hollow set screw M5x6	97768000	€ 3,21	1