TS255

Opera 2-Way Pressure Balance Shower Trim Kit with Hand Shower

OPERATING SPECIFICATIONS

INCLUDED
F984TK
F902-11
F901-21
F907-5

MIXED WATER TEMPERATURE
Maximum: 120°

OPERATING TEMPERATURE
Maximum: 176°
Minimum: 50°

OPERATING PRESSURE
Minimum: 15psi
Maximum: 125psi

Above 90psi, it may be necessary to install a pressure reducer

FLOW RATE
Shower Head: 1.8 USGPM
Hand Shower: 1.8 USGPM

MATERIAL
Solid Brass
ABS

REQUIRMENTS
Control Valve

STANDARDS
To view all standards, please visit product approvals in our learning hub at artos.us.com

WESTOVER, INC **4011 S 60TH ST, OMAHA, NE 68117** **WWW.ARTOS.US.COM** **T: 402-397-3344**

All technical specifications, product details, and pricing are subject to change without prior notice. Artos makes every effort to ensure accuracy; however, errors or omissions may occur. It is the responsibility of the installer, designer, or purchaser to verify all critical dimensions, installation requirements, and compliance with applicable codes prior to use.

Artos assumes no liability for damages, losses, or injuries resulting from the use of this documentation or from product installation, operation, or maintenance performed outside of Artos instructions and applicable codes. Product warranties are limited to those expressly stated by Artos. Please refer to official warranty documentation for complete terms and conditions.

All drawings, manuals, and specifications are the property of Artos and may not be reproduced, distributed, or altered without prior written permission.

TS255

Opera 2-Way Pressure Balance Shower Trim Kit with Hand Shower

PRODUCT DIMENSIONS

PRODUCT SKU: F984TK

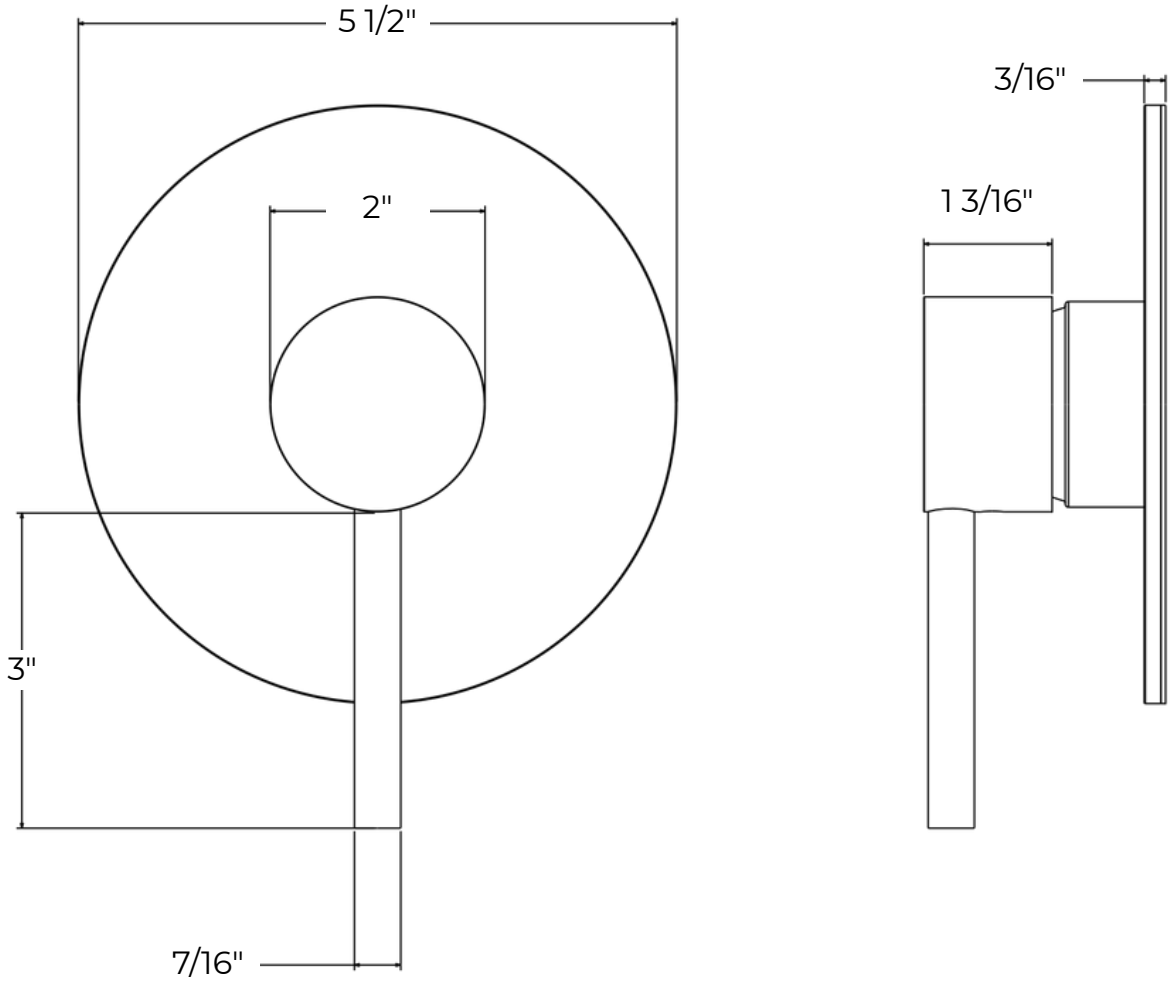

WESTOVER, INC **4011 S 60TH ST, OMAHA, NE 68117** **WWW.ARTOS.US.COM** **T: 402-397-3344**

All technical and pricing information is subject to change without prior notice. To confirm accuracy check with Artos customer service.

TS255

Opera 2-Way Pressure Balance Shower Trim Kit with Hand Shower

PRODUCT DIMENSIONS

PRODUCT SKU: F902-11

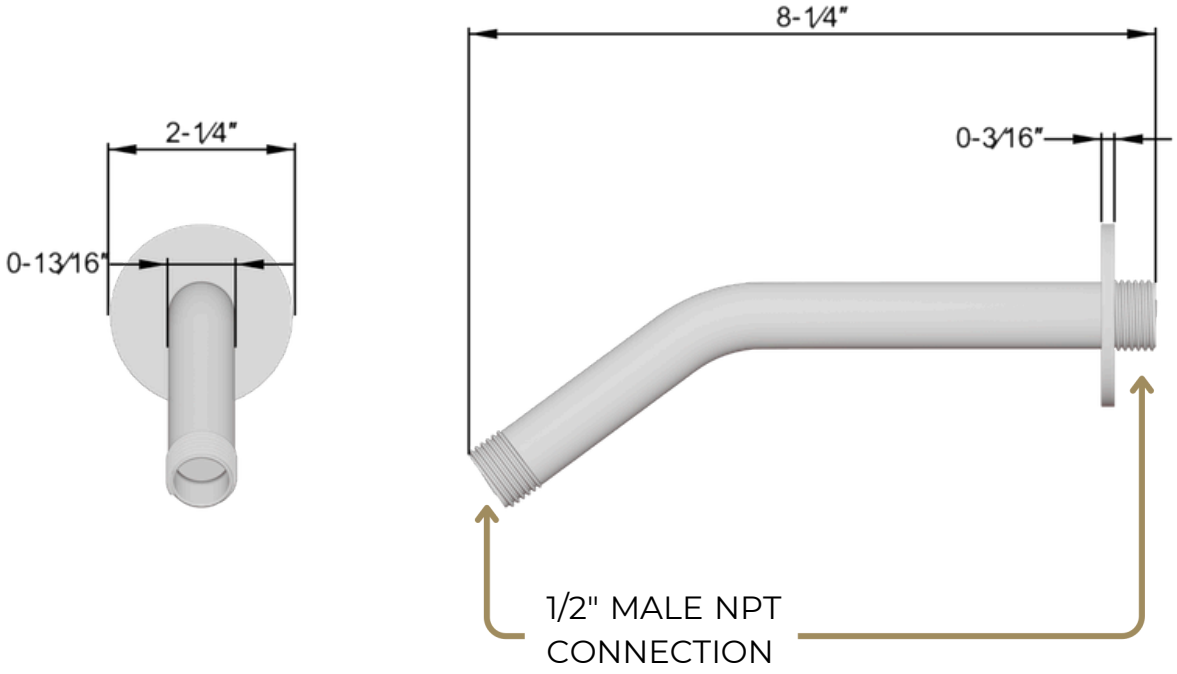

WESTOVER, INC **4011 S 60TH ST, OMAHA, NE 68117** **WWW.ARTOS.US.COM** **T: 402-397-3344**

All technical and pricing information is subject to change without prior notice. To confirm accuracy check with Artos customer service.

TS255

Opera 2-Way Pressure Balance Shower Trim Kit with Hand Shower

PRODUCT DIMENSIONS

PRODUCT SKU: F901-21

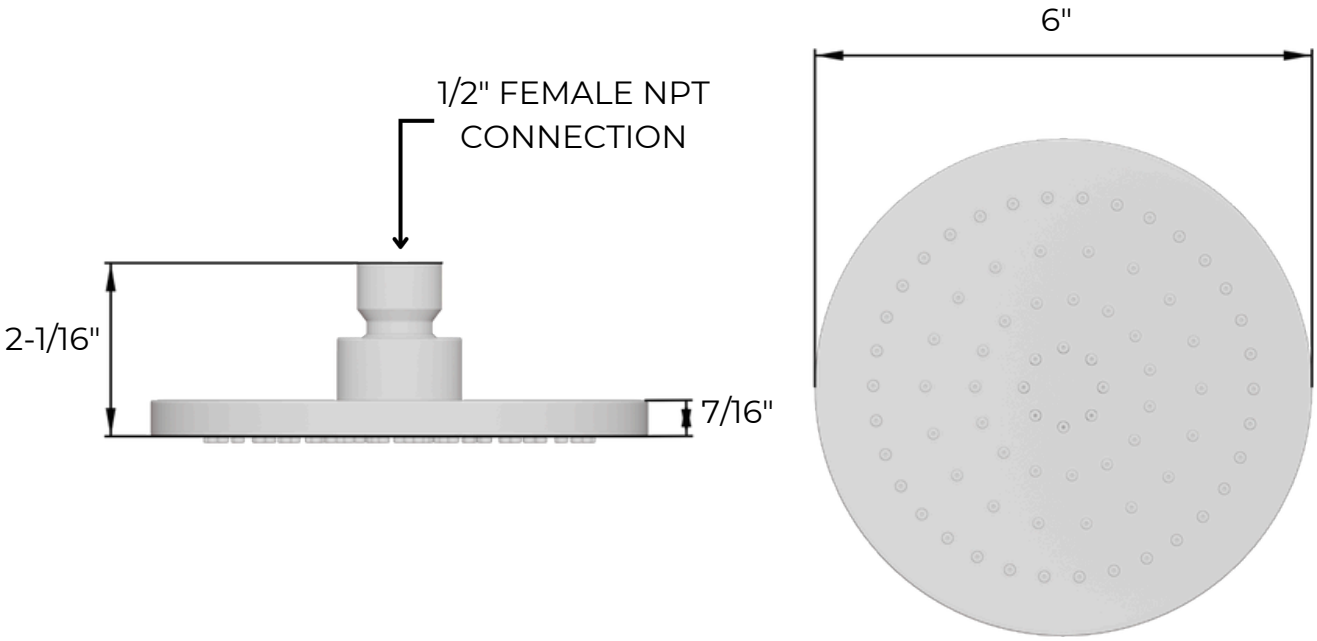

WESTOVER, INC **4011 S 60TH ST, OMAHA, NE 68117** **WWW.ARTOS.US.COM** **T: 402-397-3344**

All technical and pricing information is subject to change without prior notice. To confirm accuracy check with Artos customer service.

TS255

artos

Opera 2-Way Pressure Balance Shower Trim Kit with Hand Shower

PRODUCT DIMENSIONS

PRODUCT SKU: F907-5

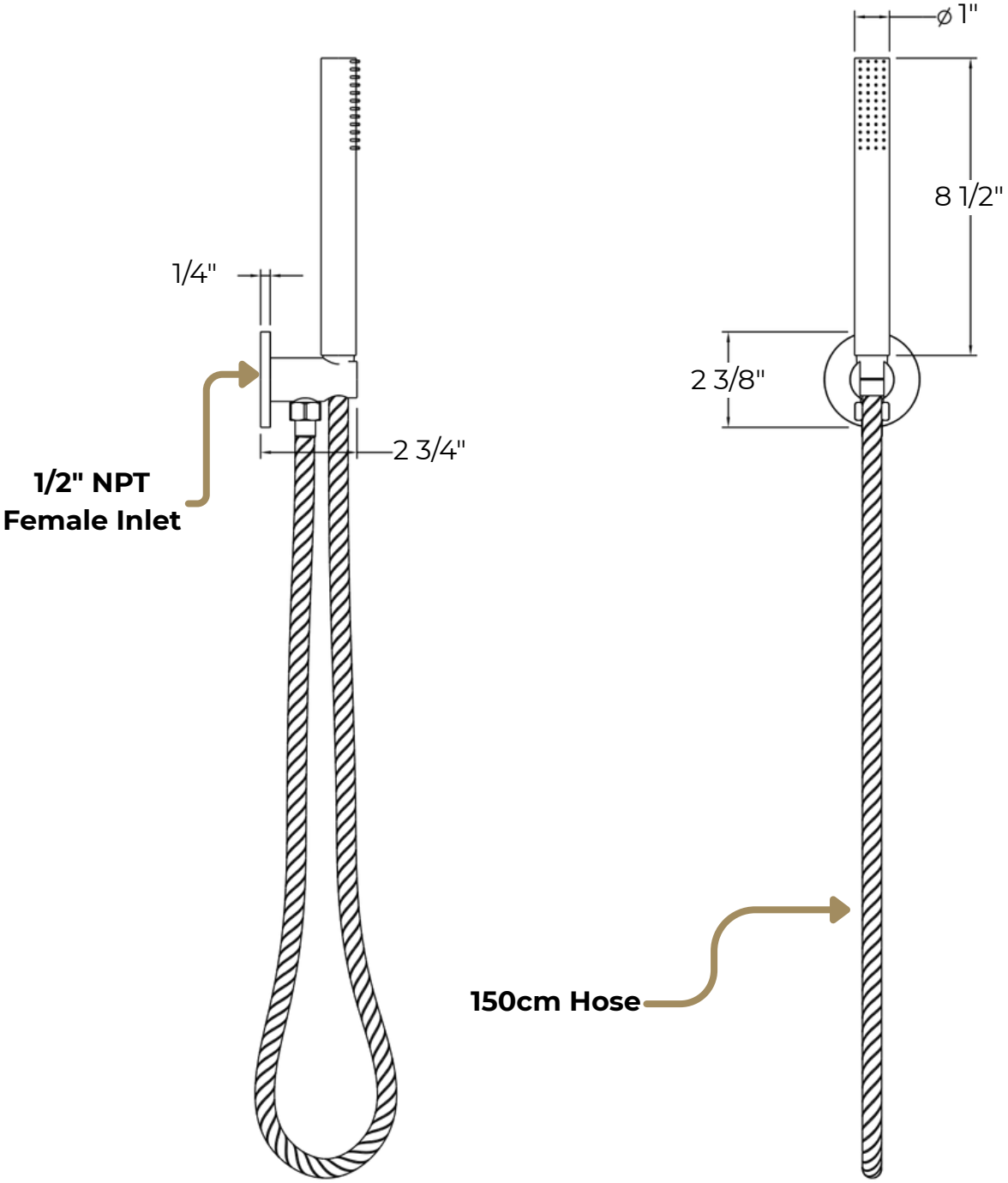

WESTOVER, INC **4011 S 60TH ST, OMAHA, NE 68117** **WWW.ARTOS.US.COM** **T: 402-397-3344**

All technical and pricing information is subject to change without prior notice. To confirm accuracy check with Artos customer service.