BY APPOINTMENT TO
HIS MAJESTY KING CHARLES III
MANUFACTURER OF KITCHEN & BATHROOM TAPS & MIXERS
BARBER WILSONS & CO. LTD.
LONDON

LONDON **BARBER WILSONS & Co** EST.1905

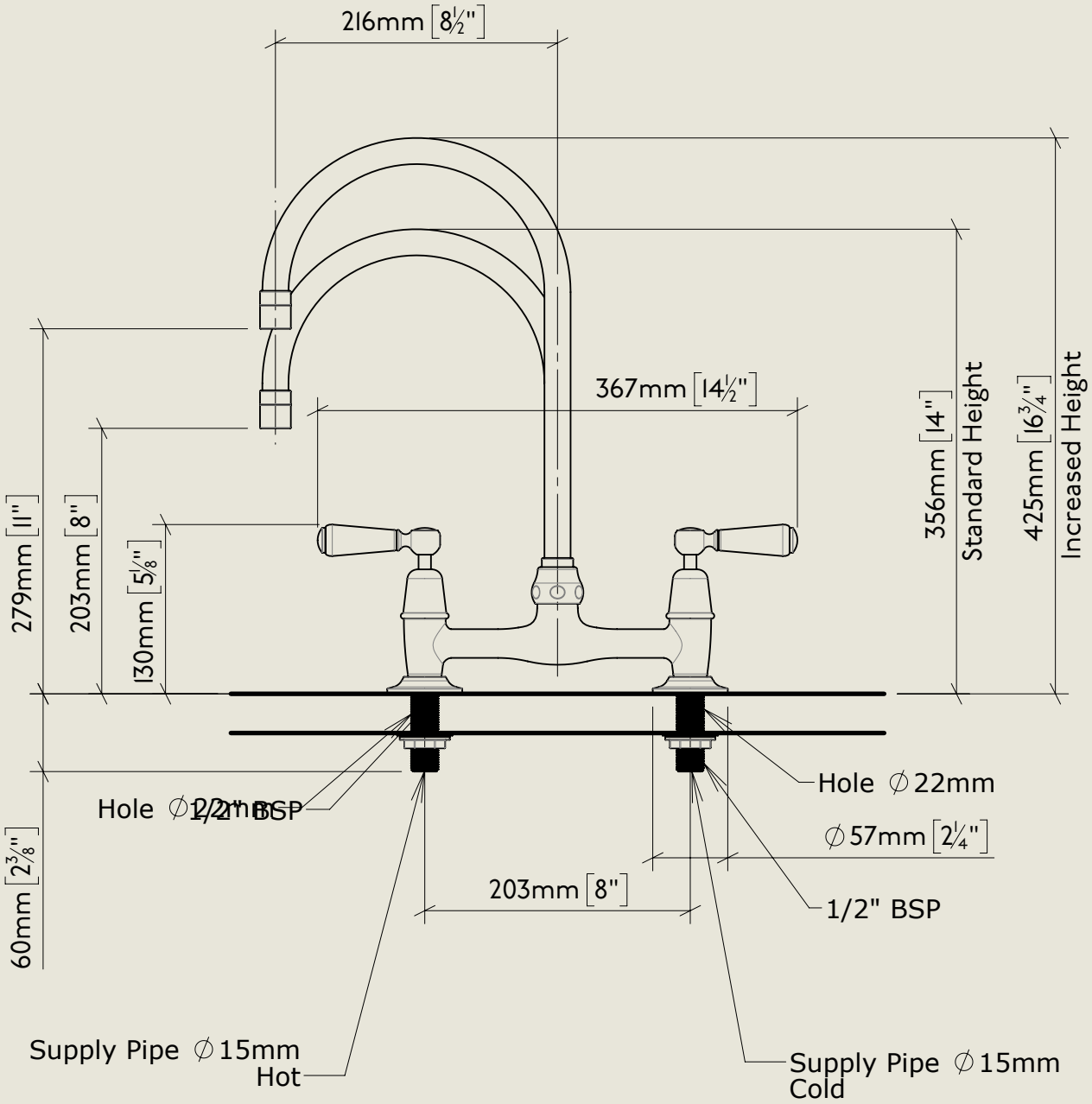

American adapters fitted as standard when purchased via BW&Co USA

Model No.	Description	
RMLI010-1900-FL	Regent Metal Lever 1010, 1900's Style, Flange Union	Complete