Futurismo Collection
G-5640-LM66K
Futurismo Bar Faucet

Product Features

- Single-hole installation
- Dual-function spray/stream pull-out sprayhead
- Reverse Osmosis Compatible w/ Re-Mineralized System
- CALGreen
- Swivel spout
- Aerated flow rate ? 1.8 max gpm

Code compliance

- CALGreen

Available Finishes

Polished Chrome
Matte White
Polished Nickel
Polished Nickel PVD®
Steelnox® (Satin Nickel)
Brushed Nickel
Brushed Nickel PVD®
Polished Champagne PVD®
Brushed Champagne PVD®
Polished Gold PVD®
Brushed Gold PVD®
Polished Brass PVD®
Brushed Brass PVD®
Satin Gold PVD®
Warm Bronze PVD®
Polished Rose Gold / Polished Copper PVD®
Brushed Rose Gold / Brushed Copper PVD®
Polished Tuscan Bronze PVD®
Brushed Tuscan Bronze PVD®
Vintage Brushed Brass
Olive Bronze
Gunmetal PVD®
Onyx PVD®
Matte Black / Polished Chrome Accents
Brushed Onyx PVD®
Architectural Black™
Matte Black
Brushed Brass PVD / Brushed Onyx PVD Accents
Brushed Onyx PVD / Brushed Brass PVD Accents
Matte Black / Steelnox® (Satin Nickel) Accents
Steelnox® Satin Nickel / Matte Black Accents
Polished Chrome / Matte Black Accents
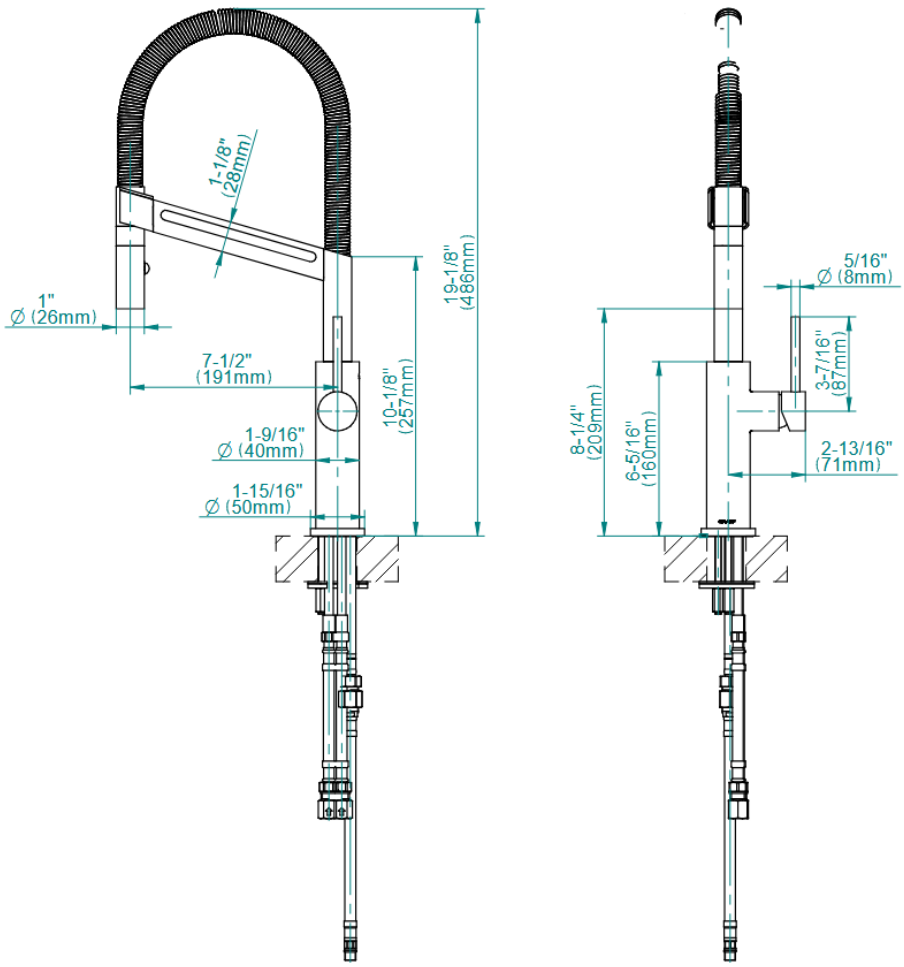
Futurismo Collection
G-5640-LM66K
Futurismo Bar Faucet