Brand	AXOR
Art. Name	**AXOR Citterio C** Single-Hole Faucet 90 with CoolStart and Pop-up Drain, 1.2 GPM
Art. Nr.	49010001
Surface	Chrome

Product Picture



Technology



Spray Types



Certicates/approvals



Features

- consists of: Single-Hole Faucet, drain
- ComfortZone: 90
- handle design: lever handle
- spray type: NormalSpray
- Max. flow rate: 1.2 GPM
- Ceramic cartridge
- Pop-up drain

Brand	AXOR
Art. Name	**AXOR Citterio C** Single-Hole Faucet 90 with CoolStart and Pop-up Drain, 1.2 GPM
Art. Nr.	49010001
Surface	Chrome

Spare Parts Drawings for build year: > 02/25

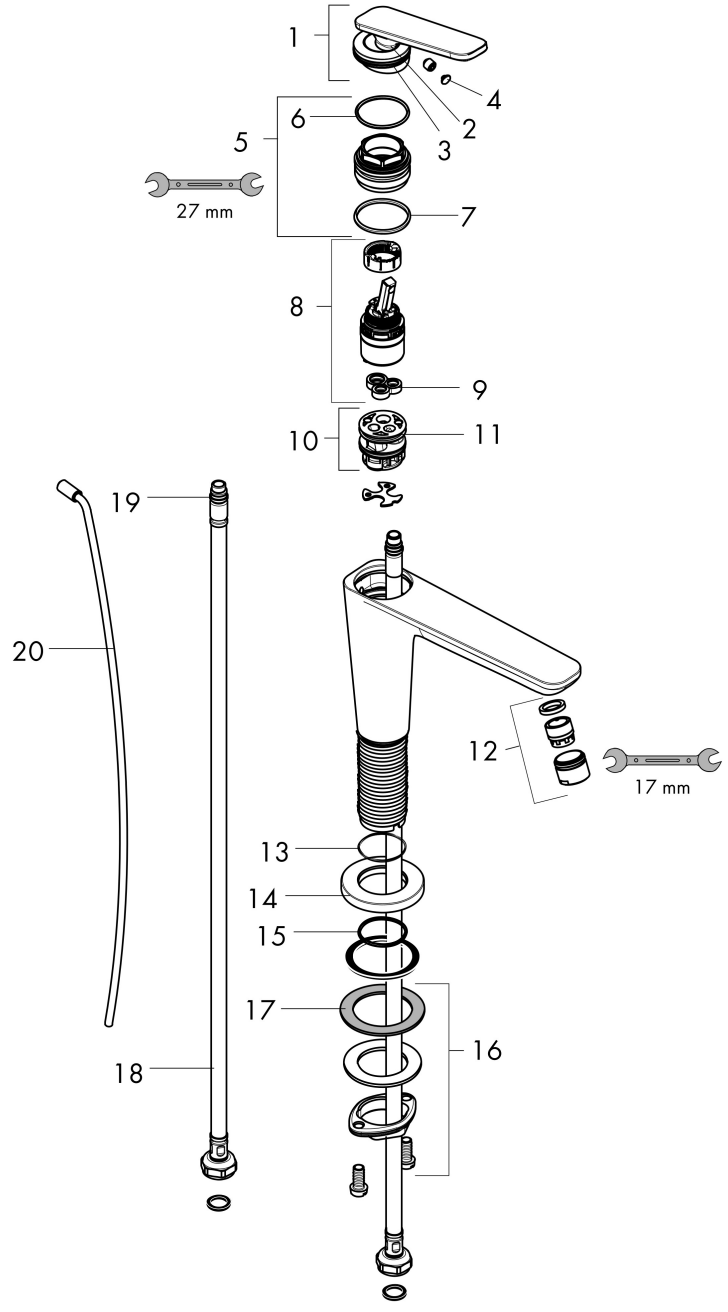

AXOR

Brand	AXOR
Art. Name	**AXOR Citterio C** Single-Hole Faucet 90 with CoolStart and Pop-up Drain, 1.2 GPM
Art. Nr.	49010001
Surface	Chrome

Spare parts list for build year: > 02/25

Pos.	Description	Article number
1	handle	87796000
2	O-ring 11x1	92924000
3	O-ring 30x1,5	98433000
4	screw cover	93983000
5	nut	94989000
6	O-ring 28x1,5	98421000
7	O-ring 29x2	98391000
8	cartridge, assy	92900000
9	seal	93383000
10	adapter for cartridge	98866000
11	O-ring 23x2	98398000
12	aerator M18x1 (4,5 l/min)	92885000
14	escutcheon	87795000
15	O-ring 26x4	92191000
16	fixing set (Ø 28)	92909000
17	lever collar	97548000
18	connection hose 18½" M8x0,75 3/8"	96321001
19	O-ring 6,6x1,6	93019000
20	pull rod	96923000
a	pop up waste	88509000
b	lever arm 200mm (ball-Ø12mm)	96007000