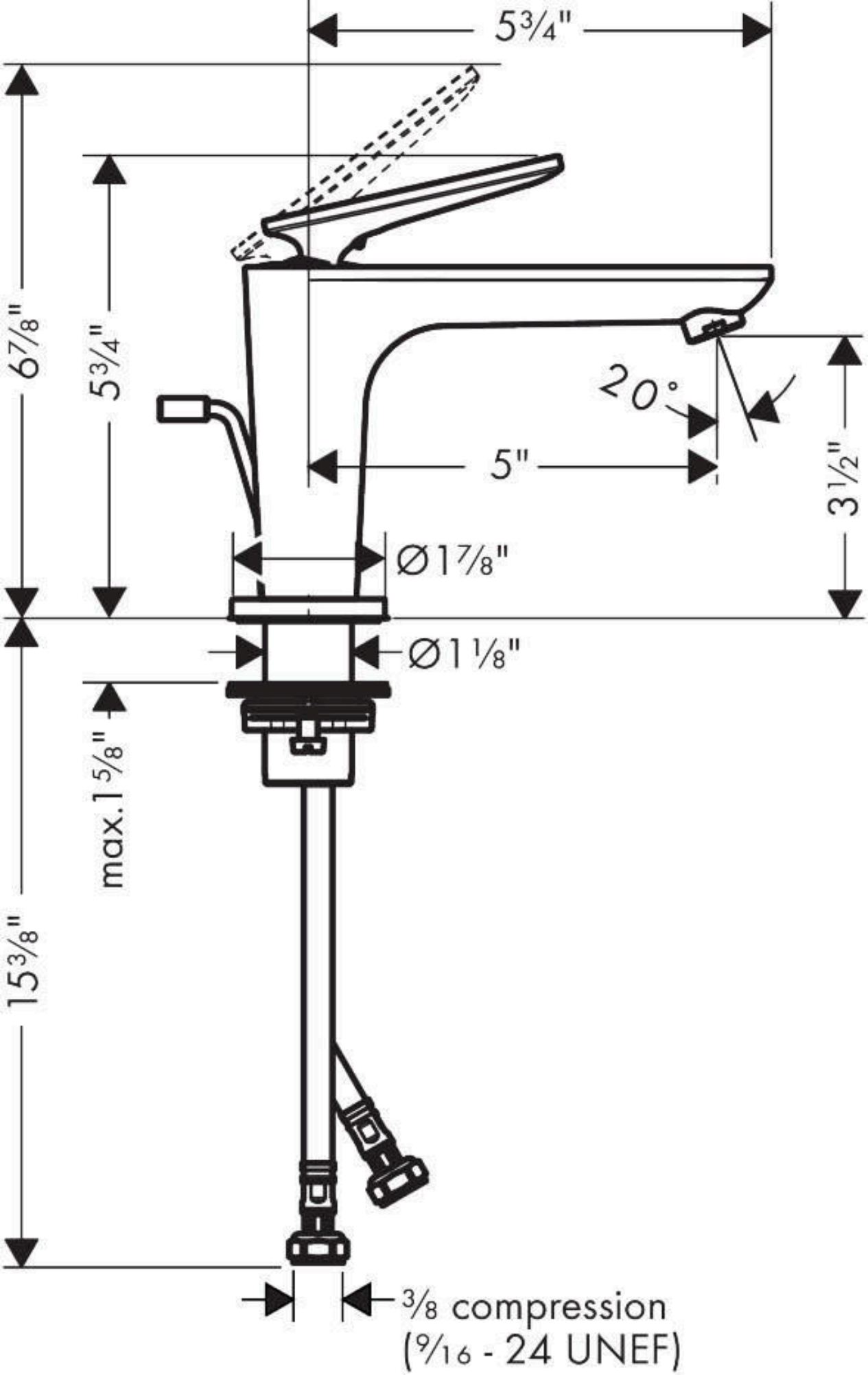
5¾"
6⅞"
5¾"
20°
5"
3½"
Ø1⅞"
Ø1⅛"
max.1⅝"
15⅜"
⅜ compression
(9/16 - 24 UNEF)