G-8043-LM61E-T
Sento Square M-Series Thermostatic Valve Trim with Handle

Product Features

- Single metal handle
- Decorative trim plate
- To complete package, you must order G-8006 thermostatic rough valve

Code compliance

- ADA

Available Finishes

Polished Chrome
Matte White
Polished Nickel
Polished Nickel PVD®
Steelnox® (Satin Nickel)
Brushed Nickel
Brushed Nickel PVD®
Polished Champagne PVD®
Brushed Champagne PVD®
Polished Gold PVD®
Brushed Gold PVD®
Polished Brass PVD®
Brushed Brass PVD®
24K Polished Gold
24K Brushed Gold
Satin Gold PVD®
Warm Bronze PVD®
Polished Rose Gold / Polished Copper PVD®
Brushed Rose Gold / Brushed Copper PVD®
Polished Tuscan Bronze PVD®
Brushed Tuscan Bronze PVD®
Vintage Brushed Brass
Olive Bronze
Gunmetal PVD®
Onyx PVD®
Brushed Onyx PVD®
Architectural Black™
Matte Black

G-8043-LM61E-T
Sento Square M-Series Thermostatic Valve Trim with Handle

G-8043-LM61E-T
Sento Series

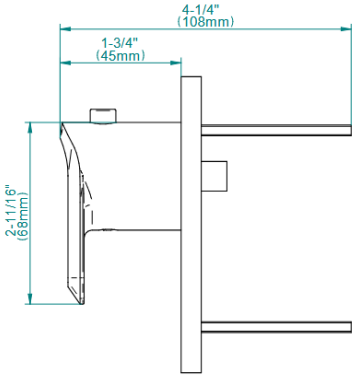

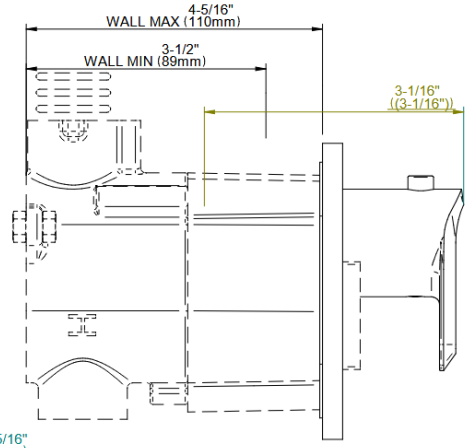

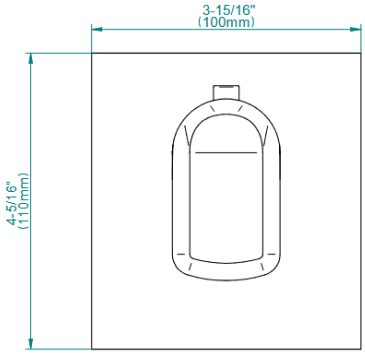

GRAFF
Art of Bath