hansgrohe

Joleena
HighArc Kitchen Faucet, 2-Spray Pull-Down, 1.75 GPM
Finish: **Chrome** Part no. : **04793000**

Description

Features

- swivel range 150°
- Aerated spray, handshower spray
- Toggle spray diverter with pause feature (allows temporary stop of water stream)
- MagFit magnetic handspray holder
- deck-mounted
- Maximum flow rate: 1.75 GPM
- ceramic cartridge
- G ⅜ hose connections
- integrated backflow prevention
- Extension length up to 14 1/2”
- Pull-Out Kitchen Faucet, connection hoses, fixation set, installation manual

Item details

List Price	$ 485.00

Technology

EcoRight · Quick Clean · Mag Fit · Comfort Zone · Pull-out

Compliance / Sustainability

MAP · ADA · UPC

Product image

Scale drawing

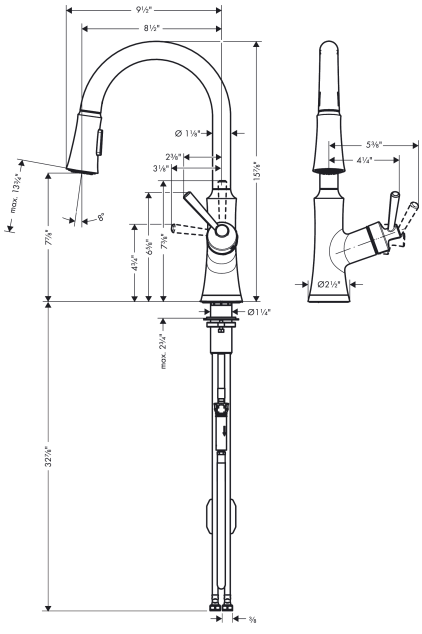

Joleena
HighArc Kitchen Faucet, 2-Spray Pull-Down, 1.75 GPM
Finish: **Chrome** Part no. : **04793000**

Exploded drawing

Year of production: **>01/20**

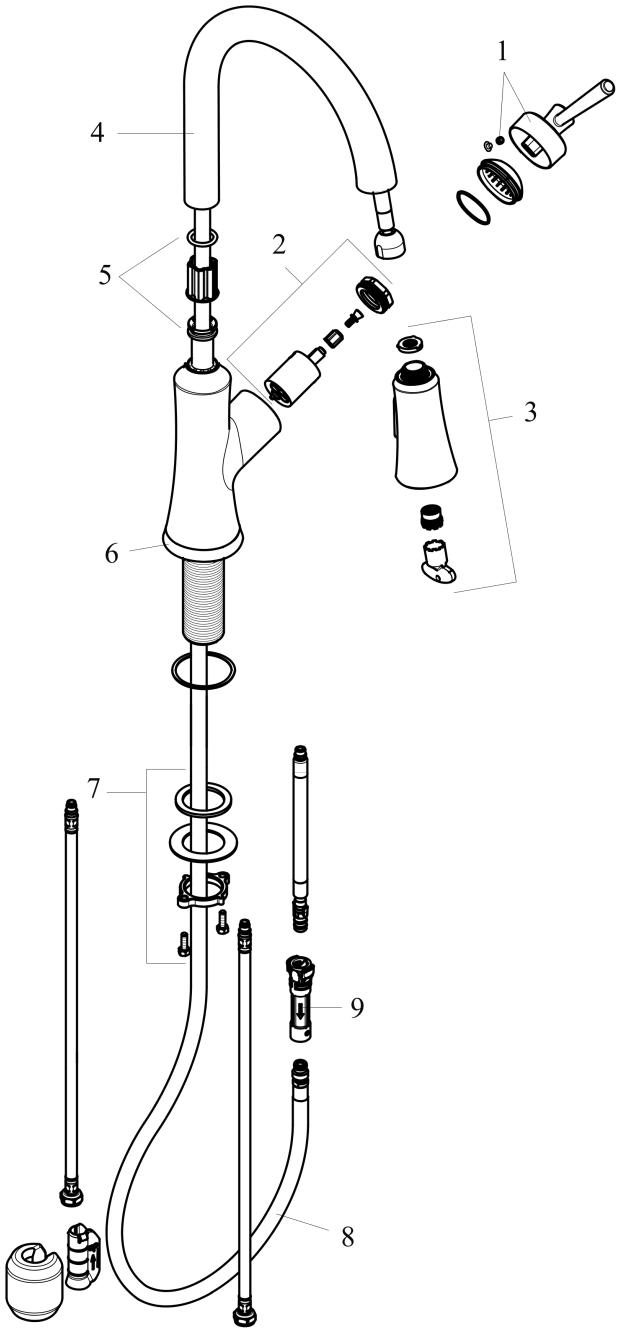

Joleena
HighArc Kitchen Faucet, 2-Spray Pull-Down, 1.75 GPM
Finish: **Chrome** Part no. : **04793000**

Spare parts list

Year of production: **>01/20**

Pos.	Description	Part no.	Price	PU
1	handle	93539000	-	1
2	cartridge, assy	93259000	-	1
3	handspray	93536000	-	1
4	spout cpl.	93538000	-	1
5	set of lever collars	93258000	-	1
6	escutcheon	93672000	-	1
7	fixing set	93263000	-	1
8	hose	93255000	-	1
9	back flow preventor cartridge	93443000	-	1
a	flange	93256000	-	1